REACTOR HEAD
STUD & NUT TOOLS

This page intentionally left blank.

« « « « ATTENTION » » » »

PLEASE READ THIS MANUAL BEFORE USING THESE PRODUCTS

WARNING: *The Reactor Head Stud Nut Runner is only intended to be used to turn a loose nut on or off the reactor head stud.*

WARNING: *The Reactor Head Stud Nut Runner and the Reactor Head Stud Turnout Tool both produce very high torque. Hold the tools firmly before activating. Never stand or place body parts between the tools and stationary objects. If the nut or the stud is hard to move, the high torque will try to pull the tool out of the operator's hands and/or create a pinching condition potentially causing injury to the user.*

WARNING: *When the reactor head stud is connected to the Stud Turnout Tool, the stud must be set down vertically. No bending or side loading is permitted on the tool.*

WARNING: *The Reactor Head Stud Turnout Tool is available for use with either 110V-50/60Hz or 220V-50/60Hz electrical service. Always make sure the appropriate tool is used for the available electrical supply. The information plate on the electric drive unit of the tools will clearly state the service for which the tool is intended.*

MASTER-LEE ENGINEERED PRODUCTS
REACTOR HEAD STUD & NUT TOOLS

Stud Nut Runner ~ Stud Turnout Tool

Master-Lee Engineered Products has designed both the Reactor Head Stud Turnout Tool and the Reactor Head Stud Nut Runner to be easy to maintain and virtually trouble free. Both tools are designed to accommodate nearly all of the existing reactor head bolting designs and require a minimum of tools to change from one reactor head stud/nut application to another. In addition, these tools can be used for other similar tasks that require turning of a stud or nut; although Master-Lee Engineered Products does not warrant the suitability for use in areas other than those for which the tools were designed.

REACTOR HEAD STUD NUT RUNNER

The Nut Runner consists of two major components: the power drive unit and the gear housing. The power drive unit is a commercially available right angle electric drill. No modification other than the removal of the drill chuck is required to use the drill on the Nut Runner. The provided drive gear has a threaded center hole to attach to the drill in place of the standard chuck.

The Nut Runner comes ready to use as-is on almost any reactor stud nut configuration. Based on the customer's application, Master-Lee Engineered Products sets up the tool with the appropriate fingers to properly engage the reactor stud nut. The fingers are typically set up in a two-finger (180°) pattern or a three-finger (120°) pattern and are bolted the tool using two 1/4-20 socket head cap screws per finger.

Operation

The Nut Runner requires 110VAC-15A electrical supply for operation. The drill is activated using the trigger built into the handle. The rotation of the drill is reversible via a switch which is also on the handle. To use the Nut Runner, place the tool over the reactor head stud and onto the nut. Be careful to ensure the fingers fully engage the slots or cutouts in the nut. While firmly holding the tool, squeeze the trigger to operate the drill. To reverse the rotation of the drill: release the trigger, let the drill come to a stop, change the position of the rotation switch, and then squeeze the trigger.

Maintenance - Drive Removal

The electric drive unit can be removed from the tool in one of two ways. The drive unit can be removed from the right angle attachment, or the drive unit and the right angle attachment can be removed from the gear housing. To remove the drive unit from the right angle attachment, simply loosen one of the bolts on the clamp sleeve and separate the drive unit from the clamp sleeve. Be careful not to lose the double hex coupling which is inside the clamp sleeve. (See the attached Milwaukee Operator's Manual, Appendix A.)

To separate the drive unit and the right angle attachment from the gear housing, perform the following steps:

- Remove the bottom housing cover.
- Remove the center socket head cap screw on the drive gear (left-hand thread).
- Unscrew the gear from the power drive (right-hand thread).
- Remove the two socket head cap screws from the "U" shaped retaining clamp and remove the clamp.
- Remove the drive unit and the right angle attachment.

Maintenance - Gear Housing

Very little maintenance is required in the Nut Runner gear housing and is limited to lubricating the bearing and drive gear. To access the gear/bearing unit, remove the eight countersunk screws from the top plate of the gear housing. This allows the entire gear/bearing unit to drop out of the housing.

The gear/bearing unit is a welded assembly and can not be disassembled. Lubricate the bearing through the slot between the ring gear and the inner ring. Lubricate the ring gear by spreading grease on the teeth of the entire gear. Use a good wheel bearing grease. Because the speed and load are very low, the choice of grease is not critical.

Drive Finger Replacement

If the Nut Runner fingers are damaged or need changed, they can easily be replaced by removing the two retaining screws. Always install the fingers with screws of the same length as the screws that were removed.

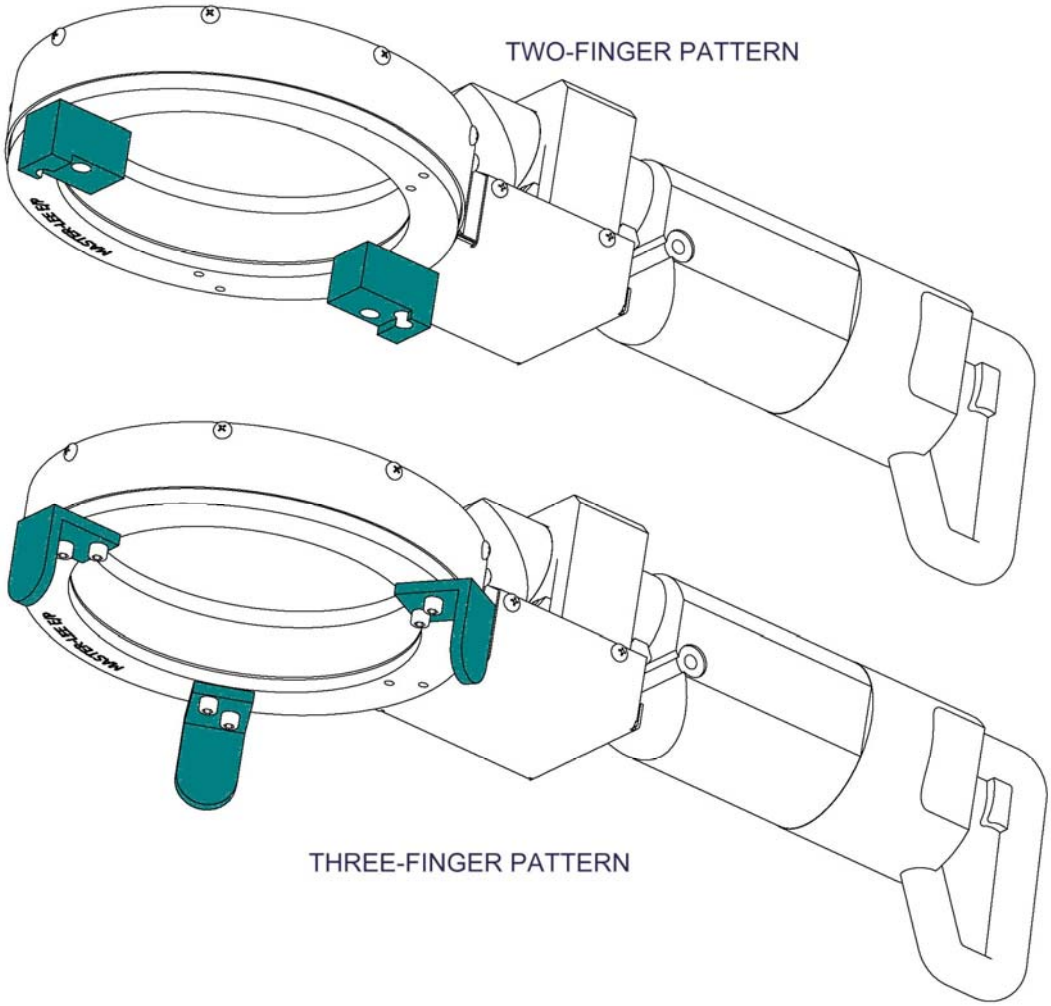

Drive Finger Installation Patterns

REACTOR HEAD STUD TURNOUT TOOL

The Turnout Tool consists of seven major components:

- Spring Balance
- Swivel
- Power Drive Unit
- Power Drive Adapter
- Yoke Assembly
- Lifting Spindle
- Variable Transformer

Refer to the illustration for the following description. The spring balance top lifting point is attached to the hoist or lifting device with appropriate rigging. The swivel is attached to the bottom of the spring can with the supplied shackle. The bottom of the swivel is attached to the top of the yoke assembly with the supplied ½" diameter bolt. The power drive adapter comes attached to the square shaft of the yoke assembly. Prior to attaching the swivel to the spring can, pass the swivel through the drive end of the power drive unit so the adapter can be engaged in the drive end of the power drive unit. The lifting spindle threads into the top of the reactor head stud and is attached to the yoke assembly with a ball lock pin.

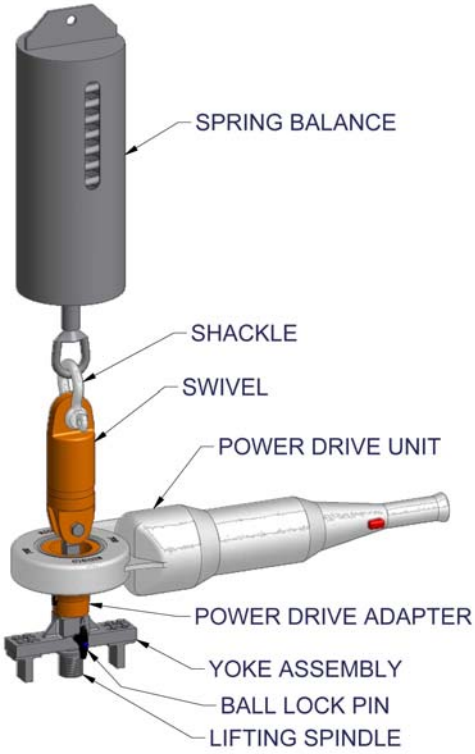

The fingers of the yoke assembly can be adjusted to fit across the flats of different sized studs. The yoke assembly should come preset for the customer's requirements, but if there is a need to change the preset size, refer to the sketch for examples of position settings. Some space should be left between the fingers and the flats of the stud, but not so much space as to allow the fingers to slip past the edges of the flats on the stud.

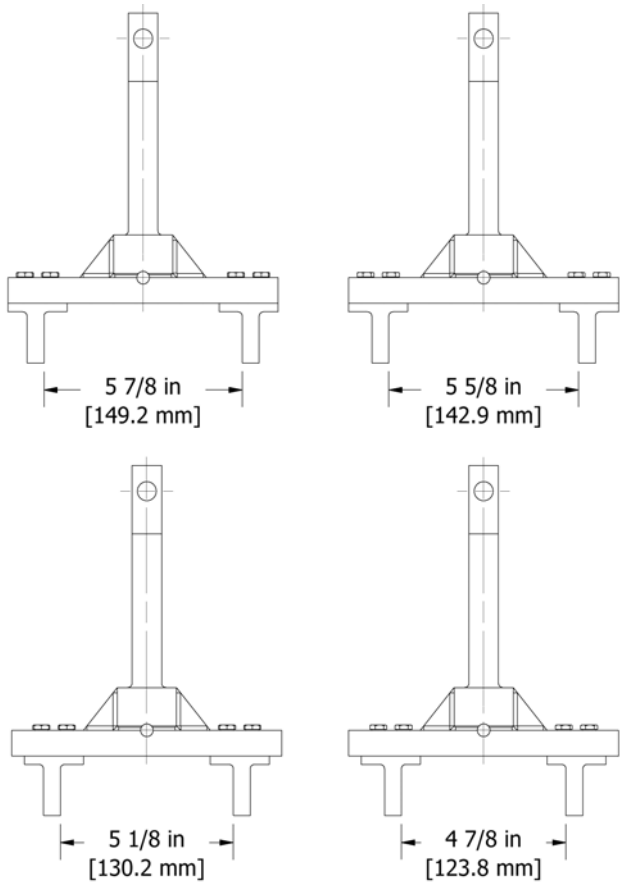

NOTE: Some stud configurations do not use "flats" but have a recessed groove. This type of stud uses a different yoke and there is no adjustment necessary.

The power drive unit plugs into the variable transformer. The variable transformer is then connected to the electric supply. The drive unit is very powerful and capable of producing high torques (See Chart 1). The variable transformer allows the operator to control the power and speed of the power drive to make the operation smoother.

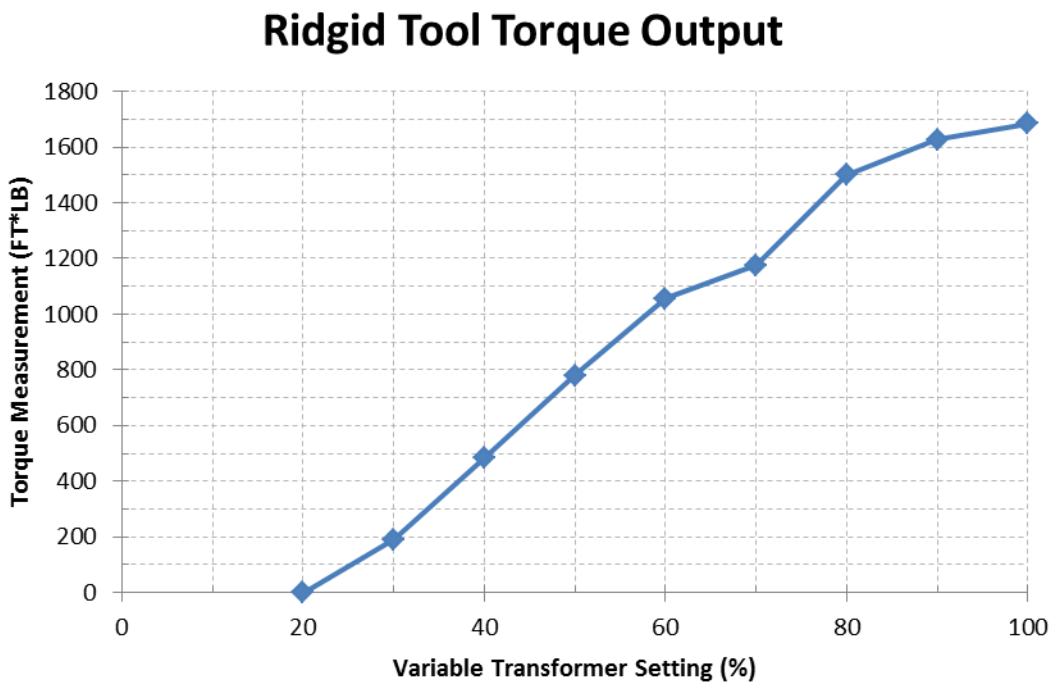

Chart 1. Rigid Tool Torque Output in relation to Variable Transformer Setting.

Operation - Stud Removal

NOTE: The operation of the turnout tool should, at a minimum, be a two-man operation – one person to operate the power drive and a second person to watch the scale reading on the spring balance and operate the hoist.

Assemble the tool per the previous description and illustration. Attach the top of the spring balance to the lifting hook of the reactor head hoist with an appropriate sized rigging. Remove the lifting spindle from the yoke assembly. Screw the lifting spindle into the top of the reactor stud. It does not need to be tightened or fully seated. It needs to be movable to allow it to line up with the yoke assembly. Lower the tool onto the stud until the yoke assembly engages the flats of the stud. Line up the hole in the spindle with the hole in the yoke assembly and insert the ball lock pin through the yoke assembly and the spindle.

Raise the hook of the head hoist until the scale on the spring balance reads approximately the same as the weight of the stud. This will take the weight of the stud off the threads and let the stud turn easier. The power drive unit has two triggers: one trigger for clockwise rotation and an opposing trigger for counter-clockwise rotation. Press the trigger for counter-clockwise rotation.

As the stud turns out, more weight will be transferred from the spring balance to the stud threads. Counteract this transfer of weight by "jogging" the hoist up to maintain the original stud weight reading on the scale. Continue the counter-clockwise rotation and jogging until the stud is free of the threads in the reactor vessel.

Prior to removal of the turnout tool, support the stud in a vertical position. NEVER use the turnout tool to lay the stud down horizontally. Remove the ball lock pin from the yoke and spindle. Raise the hoist to lift the tool off the stud. Remove the lifting spindle from the stud.

Operation - Stud Installation

Assemble the tool, attach it to the head hoist, and to the stud in the same manner that was used for stud removal. Carefully lower the stud into the stud hole of the reactor vessel until it makes contact with the threads in the hole. Begin by rotating the stud counter-clockwise until the threads are aligned. Start rotating the stud clockwise to begin threading the stud into the hole. As the stud threads into the hole, the threads will start to pull on the stud showing an increase in the reading on the scale of the spring balance. Counteract this pulling by jogging the hoist down to maintain the correct reading on the scale. Continue rotating and jogging until the stud is fully installed. Remove the tool from the stud.

Maintenance

Maintenance of the stud turnout tool is limited primarily to inspection and lubrication. Lubricate the swivel with grease before each use if a grease port is available. Inspect the ball lock pin attached to the yoke assembly for deformation, cracking, or missing balls. Ensure all of the lifting shackle screws are secure. Inspect the lifting spindle for wear and replace if the threads are worn or damaged. Inspect the yoke assembly for loose bolts, deformation, or cracking. Maintain the power drive unit per the manufacturer's recommendations which are provided with this manual.

For additional products, questions, or information please contact:

Master-Lee Engineered Products
5631 Rt. 981
Latrobe, PA 15650
724-539-8060
www.masterlee.com

This page intentionally left blank.

APPENDIX A

MILWAUKEE OPERATORS MANUAL

This page intentionally left blank.

OPERATOR'S MANUAL
MANUEL de L'UTILISATEUR
MANUAL del OPERADOR

Cat. No. No de Cat.	
1001-1 1007-1 1101-1	HEAVY-DUTY, REVERSING, 1/2" D-HANDLE DRILL EXTRA ROBUSTE PERCEUSES 13 mm (1/2") ROTATION RÉVERSIBLE, POIGÉE EN ÉNTRIER
1107-6 1107-1 1250-1	HEAVY-DUTY, REVERSIBLES, TALADRO DE 13 mm (1/2") CON EMPUNADURA EN “D”
3102-1 3102-6 3002-1	HEAVY-DUTY, RIGHT ANGLE, REVERSING 1/2" D-HANDLE DRILL EXTRA ROBUSTE PERCEUSES, COUDÉ-AD 13 mm (1/2") ROTATION RÉVERSIBLE, POIGÉE EN ÉNTRIER
3107-1 3107-6	HEAVY-DUTY, REVERSIBLES, TALADROS EN ANGULOS RECTOS, DE 13 mm (1/2") CON EMPUNADURA EN “D”
48-06-2871	RIGHT ANGLE DRIVE UNIT UNITÉ COUDÉE ANGLE DROIT CABEZAL PARA TRANSMISSION DE POTENCIA EN ANGULO RECTO
48-06-2860	33° ANGLE DRIVE UNIT RENVOI D’ANGLE DE 33° UNIDAD IMPULSORA DE ANGULO DE 33°

TO REDUCE THE RISK OF INJURY, USER MUST READ OPERATOR'S MANUAL.

AFIN DE RÉDUIRE LE RISQUE DE BLESSURES, L'UTILISATEUR DOIT LIRE LE MANUEL DE L'UTILISATEUR.

PARA REDUCIR EL RIESGO DE LESIONES, EL USUARIO DEBE LEER EL MANUAL DEL OPERADOR.

GENERAL SAFETY RULES — FOR ALL POWER TOOLS

WARNING

READ ALL INSTRUCTIONS

Failure to follow all instructions listed below may result in electric shock, fire and/or serious injury. The term "power tool" in all of the warnings listed below refers to your mains-operated (corded) power tool or battery-operated (cordless) power tool.

SAVE THESE INSTRUCTIONS

WORK AREA SAFETY

1. **Keep work area clean and well lit.** Cluttered or dark areas invite accidents.
2. **Do not operate power tools in explosive atmospheres, such as in the presence of flammable liquids, gases or dust.** Power tools create sparks which may ignite the dust or fumes.
3. **Keep children and bystanders away while operating a power tool.** Distractions can cause you to lose control.

ELECTRICAL SAFETY

4. **Power tool plugs must match the outlet. Never modify the plug in any way. Do not use any adapter plugs with earthed (grounded) power tools.** Unmodified plugs and matching outlets will reduce risk of electric shock.
5. **Avoid body contact with earthed or grounded surfaces such as pipes, radiators, ranges and refrigerators.** There is an increased risk of electric shock if your body is earthed or grounded.
6. **Do not expose power tools to rain or wet conditions.** Water entering a power tool will increase the risk of electric shock.
7. **Do not abuse the cord. Never use the cord for carrying, pulling or unplugging the power tool. Keep cord away from heat, oil, sharp edges or moving parts.** Damaged or entangled cords increase the risk of electric shock.
8. **When operating a power tool outdoors, use an extension cord suitable for outdoor use.** Use of a cord suitable for outdoor use reduces the risk of electric shock.

PERSONAL SAFETY

9. **Stay alert, watch what you are doing and use common sense when operating a power tool. Do not use a power tool while you are tired or under the influence of drugs, alcohol or medication.** A moment of inattention while operating power tools may result in serious personal injury.
10. **Use safety equipment. Always wear eye protection.** Safety equipment such as dust mask, non-skid safety shoes, hard hat, or hearing protection used for appropriate conditions will reduce personal injuries.
11. **Avoid accidental starting. Ensure the switch is in the off-position before plugging in.** Carrying power tools with your finger on the switch or plugging in power tools that have the switch on invites accidents.
12. **Remove any adjusting key or wrench before turning the power tool on.** A wrench or a key left attached to a rotating part of the power tool may result in personal injury.
13. **Do not overreach. Keep proper footing and balance at all times.** This enables better control of the power tool in unexpected situations.
14. **Dress properly. Do not wear loose clothing or jewellery. Keep your hair, clothing and gloves away from moving parts.** Loose clothes, jewellery or long hair can be caught in moving parts.
15. **If devices are provided for the connection of dust extraction and collection facilities, ensure these are connected and properly used.** Use of these devices can reduce dust-related hazards.

POWER TOOL USE AND CARE

16. **Do not force the power tool. Use the correct power tool for your application.** The correct power tool will do the job better and safer at the rate for which it was designed.
17. **Do not use the power tool if the switch does not turn it on and off.** Any power tool that cannot be controlled with the switch is dangerous and must be repaired.
18. **Disconnect the plug from the power source and/or the battery pack from the power tool before making any adjustments, changing accessories, or storing power tools.** Such preventive safety measures reduce the risk of starting the power tool accidentally.
19. **Store idle power tools out of the reach of children and do not allow persons unfamiliar with the power tool or these instructions to operate the power tool.** Power tools are dangerous in the hands of untrained users.
20. **Maintain power tools. Check for misalignment or binding of moving parts, breakage of parts and any other condition that may affect the power tool's operation. If damaged, have the power tool repaired before use.** Many accidents are caused by poorly maintained power tools.
21. **Keep cutting tools sharp and clean.** Properly maintained cutting tools with sharp cutting edges are less likely to bind and are easier to control.
22. **Use the power tool, accessories and tool bits etc., in accordance with these instructions and in the manner intended for the particular type of power tool, taking into account the working conditions and the work to be performed.** Use of the power tool for operations different from those intended could result in a hazardous situation.

SERVICE

23. **Have your power tool serviced by a qualified repair person using only identical replacement parts.** This will ensure that the safety of the power tool is maintained.

SPECIFIC SAFETY RULES

1. **Hold tools by insulated gripping surfaces when performing an operation where the cutting tool may contact hidden wiring or its own cord.** Contact with a “live” wire will make exposed metal parts of the tool “live” and shock the operator.
2. **Use auxiliary handles supplied with the tool.** Loss of control can cause personal injury.
3. **Wear ear protectors with impact drills.** Exposure to noise can cause hearing loss.
4. **Keep hands away from all cutting edges and moving parts**.
5. **Maintain labels and nameplates.** These carry important information. If unreadable or missing, contact a *MILWAUKEE* Service facility for a free replacement.
6. **WARNING:** Some dust created by power sanding, sawing, grinding, drilling, and other construction activities contains chemicals known to cause cancer, birth defects or other reproductive harm. Some examples of these chemicals are:

- lead from lead-based paint
- crystalline silica from bricks and cement and other masonry products, and
- arsenic and chromium from chemically-treated lumber.

Your risk from these exposures varies, depending on how often you do this type of work. To reduce your exposure to these chemicals: work in a well ventilated area, and work with approved safety equipment, such as those dust masks that are specially designed to filter out microscopic particles.

Specifications

					Capacities							
					Wood					Steel		Masonry
Cat. No. (RAD KIT)	**Volts AC**	**No Load RPM**	**RAD * RPM**	**33° ** RPM**	**Flat boring bit**	**Hole saw**	**Auger bit**	**Ship auger bit**	**Selfeed bit**	**Twist drill**	**Hole saw**	**Carbide-tipped bit**
1001-1	120	0-600		0-600	1-1/2"	5"	1-1/2"	1-1/2"	3-5/8"	1/2"	3-1/2"	1/2"
(3002-1)			lo 0-400		1-1/2"	5"	1-1/2"	1-1/2"	3-5/8"	1/2"	4-1/2"	1/2"
			hi 0-900		1-1/2"	4"	1-1/2"	1-1/2"	2-9/16"	1/2"	3"	1/2"
1007-1	120	0-600		0-600	1-1/2"	5"	1-1/2"	1-1/2"	3-5/8"	1/2"	3-1/2"	1/2"
(***)			lo 0-400		1-1/2"	5"	1-1/2"	1-1/2"	3-5/8"	1/2"	4-1/2"	1/2"
			hi 0-900		1-1/2"	4"	1-1/2"	1-1/2"	2-9/16"	1/2"	3"	1/2"
1101-1	120	500		500	1-1/2"	5"	1-1/2"	1-1/2"	3-5/8"	1/2"	3-3/4"	1/2"
(3102-1)			lo 0-335		1-1/2"	6"	1-1/2"	1-1/2"	4-5/8"	1/2"	5"	1/2"
			hi 0-750		1-1/2"	4-1/2"	1-1/2"	1-1/2"	2-9/16"	1/2"	3-1/2"	1/2"
1107-1	120	0-500		0-500	1-1/2"	5"	1-1/2"	1-1/2"	3-5/8"	1/2"	3-3/4"	1/2"
(3107-1)			lo 0-335		1-1/2"	6"	1-1/2"	1-1/2"	4-5/8"	1/2"	5"	1/2"
			hi 0-750		1-1/2"	4-1/2"	1-1/2"	1-1/2"	2-9/16"	1/2"	3-1/2"	1/2"
1107-6	120	0-500		0-500	1-1/2"	5"	1-1/2"	1-1/2"	3-5/8"	1/2"	3-3/4"	1/2"
(3107-6)			lo 0-335		1-1/2"	6"	1-1/2"	1-1/2"	4-5/8"	1/2"	5"	1/2"
			hi 0-750		1-1/2"	4-1/2"	1-1/2"	1-1/2"	2-9/16"	1/2"	3-1/2"	1/2"
1250-1	120	0-1000		0-1000	1-1/2"	3-1/8"	1-1/2"	1-1/16"	2-1/4"	1/2"	1-3/4"	1/2"
(***)			lo 0-665		--	--	--	--	--	--	--	--
			hi 0-1500		--	--	--	--	--	--	--	--

*** The Right Angle Drill Kit can be purchased with some drills, or as an accessory.**
**** The 33° Angle Drill Kit is available as an accessory only (Cat. No. 48-06-2860).**
***** RAD available as an accessory only (Cat. No. 48-06-2871).**

Symbology

C UL US	Underwriters Laboratories, Inc., United States and Canada
NOM-ANCE	Mexican Approvals Marking
V~	Volts Alternating Current
n_o xxxx/min.	No Load Revolutions per Minute (RPM)
A	Amperes

FUNCTIONAL DESCRIPTION

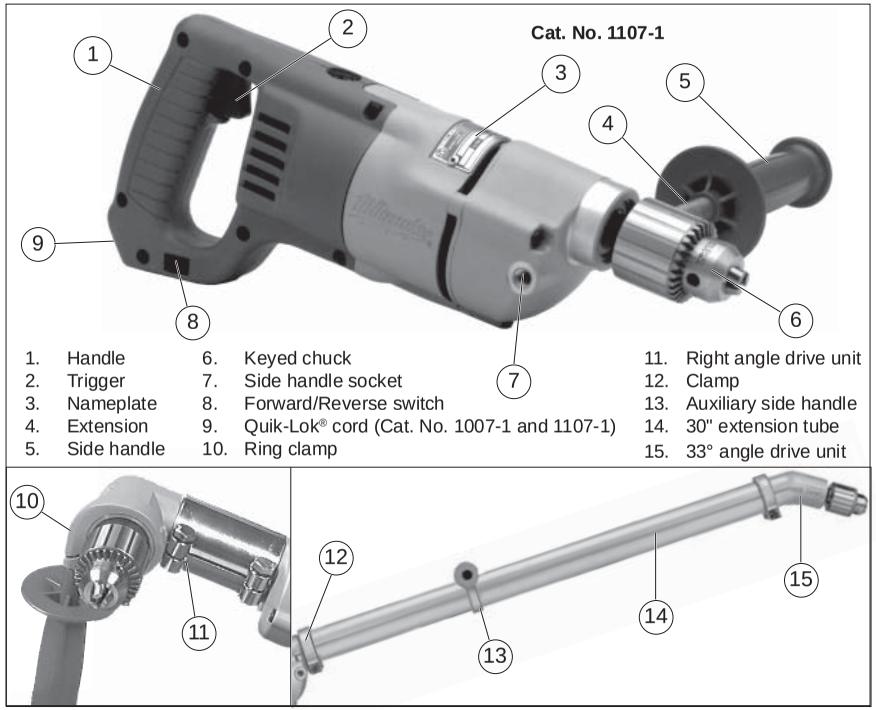

1. Handle
2. Trigger
3. Nameplate
4. Extension
5. Side handle
6. Keyed chuck
7. Side handle socket
8. Forward/Reverse switch
9. Quik-Lok® cord (Cat. No. 1007-1 and 1107-1)
10. Ring clamp
11. Right angle drive unit
12. Clamp
13. Auxiliary side handle
14. 30" extension tube
15. 33° angle drive unit

GROUNDING

WARNING

Improperly connecting the grounding wire can result in the risk of electric shock. Check with a qualified electrician if you are in doubt as to whether the outlet is properly grounded. Do not modify the plug provided with the tool. Never remove the grounding prong from the plug. Do not use the tool if the cord or plug is damaged. If damaged, have it repaired by a *MILWAUKEE* service facility before use. If the plug will not fit the outlet, have a proper outlet installed by a qualified electrician.

Grounded Tools:
Tools with Three Prong Plugs

Tools marked "Grounding Required" have a three wire cord and three prong grounding plug. The plug must be connected to a properly grounded outlet (See Figure A). If the tool should electrically malfunction or break down, grounding provides a low resistance path to carry electricity away from the user, reducing the risk of electric shock.

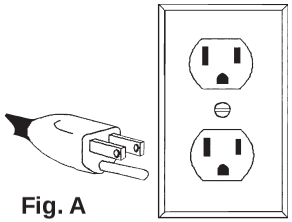

Fig. A

The grounding prong in the plug is connected through the green wire inside the cord to the grounding system in the tool. The green wire in the cord must be the only wire connected to the tool's grounding system and must never be attached to an electrically "live" terminal.

Your tool must be plugged into an appropriate outlet, properly installed and grounded in accordance with all codes and ordinances. The plug and outlet should look like those in Figure A.

Double Insulated Tools:
Tools with Two Prong Plugs

Tools marked "Double Insulated" do not require grounding. They have a special double insulation system which satisfies OSHA requirements and complies with the applicable standards of Underwriters Laboratories, Inc., the Canadian Standard Association and the National Electrical Code. Double Insulated tools may be used in either of the 120 volt outlets shown in Figures B and C.

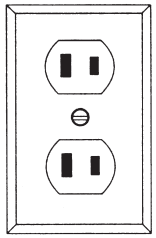

Fig. B

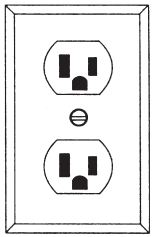

Fig. C

EXTENSION CORDS

Grounded tools require a three wire extension cord. Double insulated tools can use either a two or three wire extension cord. As the distance from the supply outlet increases, you must use a heavier gauge extension cord. Using extension cords with inadequately sized wire causes a serious drop in voltage, resulting in loss of power and possible tool damage. Refer to the table shown to determine the required minimum wire size.

The smaller the gauge number of the wire, the greater the capacity of the cord. For example, a 14 gauge cord can carry a higher current than a 16 gauge cord. When using more than one extension cord to make up the total length, be sure each cord contains at least the minimum wire size required. If you are using one extension cord for more than one tool, add the nameplate amperes and use the sum to determine the required minimum wire size.

Guidelines for Using Extension Cords

- If you are using an extension cord outdoors, be sure it is marked with the suffix "W-A" ("W" in Canada) to indicate that it is acceptable for outdoor use.
- Be sure your extension cord is properly wired and in good electrical condition. Always replace a damaged extension cord or have it repaired by a qualified person before using it.
- Protect your extension cords from sharp objects, excessive heat and damp or wet areas.

Recommended Minimum Wire Gauge for Extension Cords*

Nameplate Amperes	Extension Cord Length				
	25'	50'	75'	100'	150'
0 - 2.0	18	18	18	18	16
2.1 - 3.4	18	18	18	16	14
3.5 - 5.0	18	18	16	14	12
5.1 - 7.0	18	16	14	12	12
7.1 - 12.0	16	14	12	10	
12.1 - 16.0	14	12	10		
16.1 - 20.0	12	10			

* Based on limiting the line voltage drop to five volts at 150% of the rated amperes.

READ AND SAVE ALL INSTRUCTIONS FOR FUTURE USE.

TOOL ASSEMBLY

WARNING

To reduce the risk of injury, always unplug tool before attaching or removing accessories or making adjustments. Use only specifically recommended accessories. Others may be hazardous.

Removing and Replacing Quik-Lok® Cords

MILWAUKEE's exclusive Quik-Lok® Cords provide instant field replacement or substitution.

Fig. 1

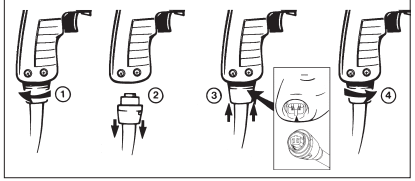

1. To remove the Quik-Lok® Cord, turn the cord nut 1/4 turn to the left and pull it out.
2. To replace the Quik-Lok® Cord, align the connector keyways and push the connector in as far as it will go. Turn the cord nut 1/4 turn to the right to lock.

Installing Side Handle

WARNING

To reduce the risk of injury, always use a side handle when using this tool. This tool operates with high torque. Always brace or hold the tool securely.

MILWAUKEE D-Handle Drills are supplied with a side handle that can be installed on either side of the tool for right or left handed use. To install the side handle, attach the side handle to the extension. Thread it into the socket on the desired side of the tool and tighten it securely. Because of the high torque of this drill, the side handle must always be used when operating the drill.

WARNING

When using the D-handle drill without the right angle drive unit, do not clamp the ring clamp with attached side handle to the front of the gear case; use the side handle instead.

Do not use the extension when using the ring clamp.

Ring Clamp, Extension, and Side Handle for Right Angle Drive Unit

For D-handle drill with Right Angle Drive Unit:

A ring clamp, extension, and side handle are supplied with the Right Angle Drive Unit. When using a right angle drive unit, attach the side handle to the ring clamp. Do not use the extension when using the ring clamp. The ring clamp with attached side handle clamps onto the right angle drive unit and can swivel 360° and locked tight in any position.

For D-handle drill without Right Angle Drive Unit:

When using the D-handle drill without the right angle drive unit, remove the ring clamp with attached side handle, then remove the side handle from the ring clamp. Attach the side handle to the extension. The side handle can be installed on either side of the tool for right or left handed use. To install the extension with attached side handle, thread it into the socket on the desired side of the tool (for right or left-handed use) and tighten securely.

NOTE: If you have an extra ring clamp with attached side handle and extension with attached side handle, do not use the extension with attached side handle when using the right angle drive unit. Remove it from the tool.

Installing Bits into Keyed Chucks

WARNING

To prevent personal injury, always remove the chuck key from the chuck after each use.

Be sure that the shank of the bit and the chuck jaws are clean. Dirt particles may cause the bit to line up improperly. Do not use bits larger than the maximum recommended capacity of the drill because gear damage or motor overloading may result. For best performance, be sure that the bits are properly sharpened before use.

Fig. 2

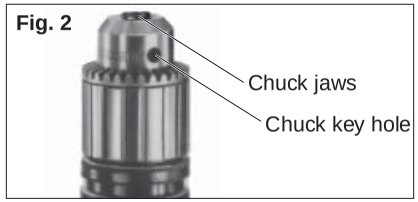

1. Unplug the tool.
2. Open the chuck jaws wide enough t insert a bit. Allow the bit to strike the bottom of the chuck. Center the bit in the chuck jaws and tighten the jaws by hand to align the bit.
3. Place the chuck key into each of the three holes in the chuck, turning it clockwise to tighten the chuck securely.

   NOTE: Never use a wrench or means other than a chuck key to tighten or loosen the chuck.
4. To remove the bit, insert the chuck key into one of the holes in the chuck and turn it counterclockwise.

Removing the Chuck from the Drill

Fig. 3

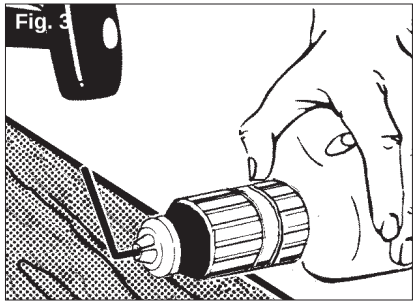

1. To remove the left-hand screw inside the chuck, unplug the tool and open the chuck jaws. Insert a T-handle hex key into the screw inside the chuck. Turn the T-handle hex key and remove the screw. Save the screw for installing your new chuck.
2. To remove chuck; tighten a large hex key into the chuck. Place the chuck on a workbench as shown. Strike the hex key with a soft-headed mallet to loosen the chuck. Remove the chuck by hand.

Attaching Right Angle Drive to Drill

1. Remove the chuck from the drill (see "Removing the Chuck From the Drill"). Slip the double hex coupling over the hex on the drill spindle.

   Loosen the clamping screws on the clamping sleeve and slip the sleeve onto the drill collar.

Installing 30"Extension Tube

Fig. 4

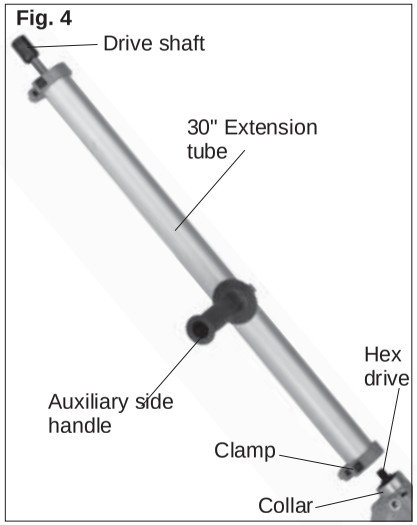

The 30" extension tube MUST be used when attaching the 33° Angle Drive. The extension tube can optionally be used with the Right Angle Drive.

1. Remove the chuck from the drill (see "Removing the Chuck From the Drill").
2. Slide extension tube over drill collar and tighten clamp securely.
3. Slide auxiliary side handle onto 30" extension tube and secure.
4. Insert drive shaft through 30" extension tube.
5. Engage hex nut with hex drive on drill.

Attaching 33° Angle Drive

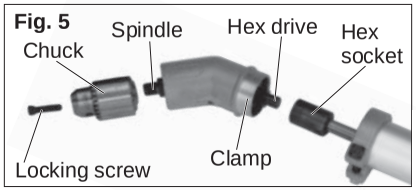

1. Attach 33° angle drive by inserting hex drive into hex socket in extension drive shaft. Secure with clamp.
2. Thread the chuck onto the 33° angle drive spindle. INSTALL CHUCK LOCKING SCREW.

Attaching Right Angle Drive to Drill

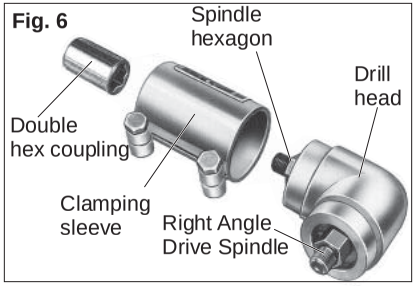

1. Remove the chuck from the drill (see "Removing the Chuck From the Drill"). Slip the double hex coupling over the hex on the drill spindle.

   Loosen the clamping screws on the clamping sleeve and slip the sleeve onto the drill collar.
2. Slide the Right Angle Drive head into the other side of the sleeve and turn the drive head slightly in either direction so the hexagonal hole in the coupling engages the hexagonal portion of the spindle.

   NOTE: Attaching the drill chuck to the side marked "LOW" reduces the speed by 1/3, or 33%. Attaching the drill chuck to the opposite side increases the speed by 50%.
3. When assembled, turn the Right Angle Drive head to the desired position and tighten the clamping screws to secure the unit. Thread the chuck onto the Right Angle Drive spindle. INSTALL CHUCK LOCKING SCREW.

Attaching Right Angle Drive to 30" Extension Tube

1. Attach right angle drive by inserting spindle hexagon into hex socket in extension drive shaft. Secure with clamp.
2. Thread the chuck onto the right angle drive spindle. INSTALL CHUCK LOCKING SCREW.

Removing Chuck From Angle Drive Units

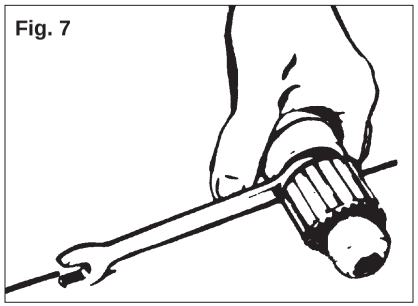

The chuck can be removed from the angle drive unit in the same manner it is removed from the drill; however, ALWAYS REMOVE ANGLE DRIVE FROM THE DRILL BEFORE ATTEMPTING TO LOOSEN THE CHUCK. This will prevent damaging the drill's gearing. Use the open end wrench provided to hold the angle drive spindle before attempting to loosen the chuck.

OPERATION

WARNING

To reduce the risk of injury, wear safety goggles or glasses with side shields. Unplug the tool before changing accessories or making adjustments.

Using Forward/Reverse Switch

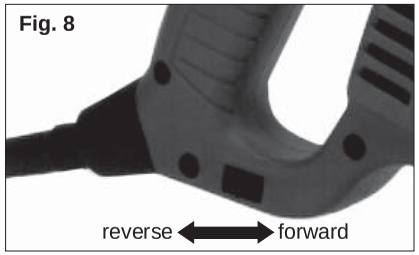

1. For **forward** (clockwise) rotation, push the forward/reverse switch to FWD as shown.

   Check the direction of rotation before use.
2. For **reverse** (counterclockwise) rotation, push the forward/reverse switch to REV as shown.

   Check the direction of rotation before use.

   Although an interlock prevents reversing the tool while the motor is running, allow the motor to come to a full stop before reversing.

WARNING

To reduce the risk of injury, keep hands and cord away from the bit and all moving parts.

Starting, Stopping and Controlling Speed

1. To **start** the tool, pull trigger.
2. To **stop** the tool, release the trigger.
3. To vary the speed, increase or decrease pressure to the trigger. The further the trigger is pulled, the greater the speed.

WARNING

To reduce the risk of explosion, electric shock and property damage, always check the work area for hidden pipes and wires before drilling.

Drilling

1. Before drilling, be sure the workpiece is clamped securely. Use backing material to prevent damage to the workpiece during breakthrough.
2. When starting a hole, place the drill bit on the work surface and apply firm pressure. Begin drilling at a slow speed, gradually increasing the speed as you drill.
3. Always apply pressure in line with the bit. Use enough pressure to keep the drill biting, but do not push hard enough to stall the motor.
4. Reduce pressure and ease the bit through the last part of the hole. While the tool is still running, pull the bit out of the hole to prevent jamming.

Stalling

If the tool seems as if it is about to stall, maintain a firm grip and reduce pressure slightly to allow the bit to regain speed. If the tool does stall, release the trigger immediately. Reverse the motor, remove the bit from the work and start again. Do not pull the trigger on and off in an attempt to start a stalled drill. This can damage the drill.

WARNING

To reduce the risk of personal injury, hold the tool securely. Brace tools with side handles as shown (Fig. 9, 10 & 11). If the bit binds, the tool will be forced in the opposite direction. Bits may bind if they are misaligned or when breaking through a hole. Wood boring bits can also bind if they run into nails or knots.

Fig. 9

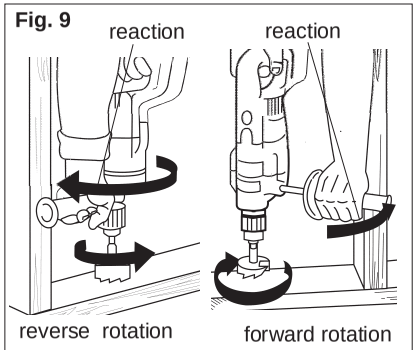

Bracing against a stud

Fig. 10

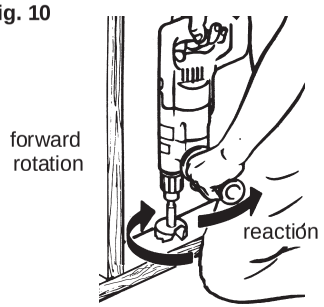

Bracing against your leg

Fig. 11

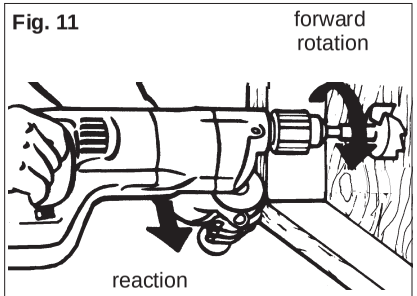

Bracing against the floor

APPLICATIONS

Selecting Bits

When selecting a bit, use the right type for your job. For best performance, always use sharp bits.

Drilling in Wood, Composition Materials and Plastic

When drilling in wood, composition materials and plastic, start the drill slowly, gradually increasing speed as you drill. Use low speeds for plastics with a low melting point.

NOTE: Keep the speed low enough to prevent burning the bit.

Drilling in Metal

When drilling in metal, use high speed steel twist drills or hole saws. Use a center punch to start the hole. Lubricate drill bits with cutting oil when drilling in iron or steel. Use a coolant when drilling in nonferrous metals such as copper, brass or aluminum. Back the material to prevent binding and distortion on breakthrough.

Drilling in Masonry

When drilling in masonry, use high speed carbide-tipped bits. Drilling soft masonry materials such as cinder block requires little pressure. Hard materials like concrete require more pressure. A smooth, even flow of dust indicates the proper drilling rate. Do not let the bit spin in the hole without cutting. Do not use water to settle dust or to cool bit. Do not attempt to drill through steel reinforcing rods. Both actions will damage the carbide.

MAINTENANCE

WARNING

To reduce the risk of injury, always unplug your tool before performing any maintenance. Never disassemble the tool or try to do any rewiring on the tool's electrical system. Contact a *MILWAUKEE* service facility for ALL repairs.

Maintaining Tools

Keep your tool in good repair by adopting a regular maintenance program. Before use, examine the general condition of your tool. Inspect guards, switches, tool cord set and extension cord for damage. Check for loose screws, misalignment, binding of moving parts, improper mounting, broken parts and any other condition that may affect its safe operation. If abnormal noise or vibration occurs, turn the tool off immediately and have the problem corrected before further use. Do not use a damaged tool. Tag damaged tools “DO NOT USE” until repaired (see “Repairs”).

Under normal conditions, relubrication is not necessary until the motor brushes need to be replaced. After six months to one year, depending on use, return your tool to the nearest *MILWAUKEE* service facility for the following:

- Lubrication
- Brush inspection and replacement
- Mechanical inspection and cleaning (gears, spindles, bearings, housing, etc.)
- Electrical inspection (switch, cord, armature, etc.)
- Testing to assure proper mechanical and electrical operation

WARNING

To reduce the risk of injury, electric shock and damage to the tool, never immerse your tool in liquid or allow a liquid to flow inside the tool.

Cleaning

Clean dust and debris from vents. Keep the tool handles clean, dry and free of oil or grease. Use only mild soap and a damp cloth to clean your tool since certain cleaning agents and solvents are harmful to plastics and other insulated parts. Some of these include: gasoline, turpentine, lacquer thinner, paint thinner, chlorinated cleaning solvents, ammonia and household detergents containing ammonia. Never use flammable or combustible solvents around tools.

Repairs

If your tool is damaged, return the entire tool to the nearest service center.

ACCESSORIES

WARNING

To reduce the risk of injury, always unplug the tool before attaching or removing accessories. Use only specifically recommended accessories. Others may be hazardous.

For a complete listing of accessories refer to your *MILWAUKEE* Electric Tool catalog or go on-line to www.milwaukeetool.com. To obtain a catalog, contact your local distributor or a service center.

Quik-Lok® cord sets
Cat. No. 48-76-4008

Plastic Carrying Case
Cat. No. 48-55-0802

Ring Clamp Side Handle (for RAD units)
Cat. No. 49-15-0200

Side Handle (for aluminum gear case)
Cat. No. 49-15-0151

Chuck Key
Cat. No. 48-66-3280

Chuck Key Holder
Cat. No. 48-66-4040

FIVE YEAR TOOL LIMITED WARRANTY

Every *MILWAUKEE* electric power tool (including battery charger) is warranted to the original purchaser only to be free from defects in material and workmanship. Subject to certain exceptions, *MILWAUKEE* will repair or replace any part on a electric power tool which, after examination, is determined by *MILWAUKEE* to be defective in material or workmanship for a period of five (5) years* after the date of purchase. Return the electric power tool and a copy of proof of purchase to a *MILWAUKEE* factory Service/Sales Support Branch location or *MILWAUKEE* Authorized Service Station, freight prepaid and insured, are requested for this warranty to be effective. This warranty does not apply to damage that *MILWAUKEE* determines to be from repairs made or attempted by anyone other than *MILWAUKEE* authorized personnel, misuse, alterations, abuse, normal wear and tear, lack of maintenance, or accidents.

* The warranty period for Hoists (lever, hand chain, & electric chain hoists), all Ni-CD battery packs, Work Lights (cordless flashlights), Job Site Radios, and Trade Titan™ Industrial Work Carts is one (1) year from the date of purchase. *The warranty period for Li-Ion battery packs that do not contain V™-technology – 4.0 volts through 18.0 volts - is two (2) years from the date of purchase.

*There is a separate warranty for V™-technology Li-Ion Battery Packs V™18 volts and above that accompany V™-technology cordless power tools:

*Every MILWAUKEE V™-technology Li-Ion Battery Pack 18 volts or above is covered by an initial 1000 Charges/2 Years free replacement warranty. This means that for the earlier of the first 1000 charges or two (2) years from the date of purchase/first charge, a replacement battery will be provided to the customer for any defective battery free of charge. Thereafter, customers will also receive an additional warranty on a pro rata basis up to the earlier of the first 2000 charges or five (5) Years from the date of purchase/first charge. This means that every customer gets an additional 1000 charges or three (3) years of pro rata warranty on the V™-technology Li-Ion Battery Pack 18 volts or above depending upon the amount of use. During this additional warranty period, the customer pays for only the useable service received over and above the first 1000 Charges/2 years, based on the date of first charge and number of charges found on the battery pack via Milwaukee's V™-technology Service Reader.

Warranty Registration is not necessary to obtain the applicable warranty on a *MILWAUKEE* product. However, proof of purchase in the form of a sales receipt or other information deemed sufficient by *MILWAUKEE*, is requested.

ACCEPTANCE OF THE EXCLUSIVE REPAIR AND REPLACEMENT REMEDIES DESCRIBED HEREIN IS A CONDITION OF THE CONTRACT FOR THE PURCHASE OF EVERY *MILWAUKEE* PRODUCT. IF YOU DO NOT AGREE TO THIS CONDITION, YOU SHOULD NOT PURCHASE THE PRODUCT. IN NO EVENT SHALL *MILWAUKEE* BE LIABLE FOR ANY INCIDENTAL, SPECIAL, CONSEQUENTIAL OR PUNITIVE DAMAGES, OR FOR ANY COSTS, ATTORNEY FEES, EXPENSES, LOSSES OR DELAYS ALLEGED TO BE AS A CONSEQUENCE OF ANY DAMAGE TO, FAILURE OF, OR DEFECT IN ANY PRODUCT INCLUDING, BUT NOT LIMITED TO, ANY CLAIMS FOR LOSS OF PROFITS. THIS WARRANTY IS EXCLUSIVE AND IN LIEU OF ALL OTHER WARRANTIES OR CONDITIONS, WRITTEN OR ORAL, EXPRESSED OR IMPLIED. WITHOUT LIMITING THE GENERALITY OF THE FOREGOING, *MILWAUKEE* DISCLAIMS ANY IMPLIED WARRANTY OF MERCHANTABILITY OR FITNESS FOR A PARTICULAR USE OR PURPOSE, AND ALL OTHER WARRANTIES.

This warranty applies to product sold in the U.S.A., Canada and Mexico only.

RÈGLES GÉNÉRALES DE SÉCURITÉ

AVERTISSEMENT

LIRE SOIGNEUSEMENT TOUTES LES INSTRUCTIONS

Le non respect des instructions ci-après peut entraîner des chocs électriques, des incendies et/ou des blessures graves. Le terme «outil électrique» figurant dans les avertissements ci-dessous renvoie à l'outil électrique à alimentation par le réseau (à cordon) ou par batterie (sans fil).

CONSERVER CES INSTRUCTIONS

SÉCURITÉ DU LIEU DE TRAVAIL

1. **Maintenir la zone de travail propre et bien éclairée.** Les zones encombrées ou mal éclairées sont favorables aux accidents.
2. **Ne pas utiliser d'outil électrique dans une atmosphère explosive, telle qu'en en présence de liquides, de gaz ou de poussières inflammables.** Les outils électriques génèrent des étincelles qui peuvent enflammer les poussières ou les fumées.
3. **Tenir les enfants et les personnes non autorisées à l'écart pendant le fonctionnement d'un outil électrique.** Un manque d'attention de l'opérateur risque de lui faire perdre le contrôle de l'outil.

SÉCURITÉ ÉLECTRIQUE

4. **La fiche de l'outil électrique doit correspondre à la prise d'alimentation. Ne jamais modifier la fiche d'une manière quelconque. Ne pas utiliser d'adaptateur avec les outils électriques mis à la terre (à la masse).** Des fiches non modifiées et des prises d'alimentation assorties réduisent le risque de choc électrique.
5. **Éviter tout contact corporel avec des surfaces reliées à la masse ou à la terre telles que tuyaux, radiateurs, cuisinières et réfrigérateurs.** Un risque de choc électrique plus élevé existe si le corps est relié à la masse ou à la terre.
6. **Ne pas exposer les outils électriques à la pluie ou à l'humidité.** Le risque de choc électrique augmente si de l'eau s'infiltre dans un outil électrique.
7. **Prendre soin du cordon. Ne jamais utiliser le cordon pour transporter, tirer ou débrancher l'outil électrique. Tenir le cordon à l'écart de la chaleur, des huiles, des arêtes coupantes ou des pièces en mouvement.** Un cordon endommagé ou emmêlé présente un risque accru de choc électrique.
8. **Se procurer un cordon d'alimentation approprié en cas d'utilisation d'un outil électrique à l'extérieur.** L'utilisation d'un cordon d'alimentation pour usage extérieur réduit le risque de choc électrique.

SÉCURITÉ INDIVIDUELLE

9. **Être sur ses gardes, être attentif et faire preuve de bon sens en utilisant un outil électrique. Ne pas utiliser un outil électrique en cas de fatigue ou sous l'influence de drogues, d'alcool ou de médicaments.** Un instant d'inattention lors de l'utilisation d'un outil électrique peut entraîner des blessures graves.
10. **Utiliser un équipement de sécurité. Toujours porter des lunettes de protection.** Un équipement de sécurité comprenant masque anti-poussière, chaussures de sécurité anti-dérapantes, casque ou dispositif de protection anti-bruit peut, dans les circonstances appropriées, réduire le risque de blessure.
11. **Éviter tout démarrage accidentel de l'outil. S'assurer que le commutateur est en position OFF (Arrêt) avant de brancher l'outil.** Le port de l'outil avec un doigt sur le commutateur ou son branchement avec le commutateur en position ON (Marche) sont favorables aux accidents.

APPENDIX B

RIDGID OPERATORS MANUAL

This page intentionally left blank.

700
Portable Power Drive

RIDGID®

700 Portable Power Drive	
Record Serial Number below and retain product serial number which is located on nameplate.	
Serial No.	

General Safety Rules

WARNING! Read and understand all instructions. Failure to follow all instructions listed below may result in electric shock, fire, and/or serious personal injury.

SAVE THESE INSTRUCTIONS!

Work Area

- **Keep your work area clean and well lit.** Cluttered benches and dark areas invite accidents.
- **Do not operate power tools in explosive atmospheres, such as in the presence of flammable liquids, gases, or dust.** Power tools create sparks which may ignite the dust or fumes.
- **Keep by-standers, children, and visitors away while operating a power tool.** Distractions can cause you to lose control.
- **Keep floors dry and free of slippery materials such as oil.** Slippery floors invite accidents.

Electrical Safety

- **Grounded tools must be plugged into an outlet, properly installed and grounded in accordance with all codes and ordinances. Never remove the grounding prong or modify the plug in any way. Do not use any adapter plugs. Check with a qualified electrician if you are in doubt as to whether the outlet is properly grounded.** If the tool should electrically malfunction or break down, grounding provides a low resistance path to carry electricity away from the user.

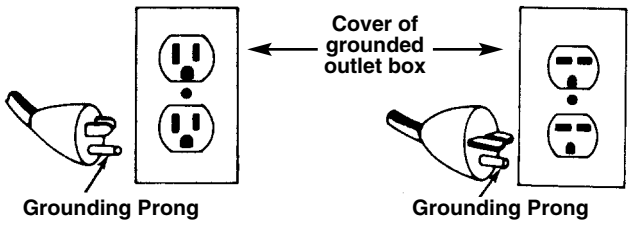

- **Avoid body contact with grounded surfaces such as pipes, radiators, ranges and refrigerators.** There is an increased risk of electrical shock if your body is grounded.
- **Do not expose electrical power tools to rain or wet conditions.** Water entering a power tool will increase the risk of electrical shock.
- **Do not abuse cord. Never use the cord to carry the tools or pull the plug from an outlet. Keep cord away from heat, oil, sharp edges or moving parts. Replace damaged cords immediately.** Damaged cords increase the risk of electrical shock.
- **When operating a power tool outside, use an outdoor extension cord marked "W-A" or "W".** These cords are rated for outdoor use and reduce the risk of electrical shock.
- **Use only three-wire extension cords which have three-prong grounding plugs and three-pole receptacles which accept the tool's plug.** Use of other extension cords will not ground the tool and increase the risk of electrical shock.
- **Use proper extension cords.** *(See Chart)* Insufficient conductor size will cause excessive voltage drop and loss of power.

Minimum Wire Gauge for Extension Cord			
Nameplate Amps	Total Length (in feet)		
	0 – 25	26 – 50	51 – 100
0 – 6	18 AWG	16 AWG	16 AWG
6 – 10	18 AWG	16 AWG	14 AWG
10 – 12	16 AWG	16 AWG	14 AWG
12 – 16	14 AWG	12 AWG	NOT RECOMMENDED

- **Keep all electric connections dry and off the ground. Do not touch plugs or tool with wet hands.** Reduces the risk of electrical shock.

Personal Safety

- **Stay alert, watch what you are doing and use common sense when operating a power tool. Do not use tool while tired or under the influence of drugs, alcohol or medication.** A moment of inattention while operating power tools may result in serious personal injury.
- **Dress properly. Do not wear loose clothing or jewelry. Contain long hair. Keep your hair, clothing and gloves away from moving parts.** Loose clothes, jewelry or long hair can be caught in moving parts.
- **Avoid accidental starting. Be sure switch is OFF before plugging in.** Carrying tools with your finger on the switch or plugging in tools that have the switch ON invites accidents.
- **Remove adjusting keys or wrenches before turning the tool ON.** A wrench or a key that is left attached to a rotating part of the tool may result in personal injury.
- **Do not overreach. Keep proper footing and balance at all times.** Proper footing and balance enables better control of the tool in unexpected situations.
- **Use safety equipment. Always wear eye protection.** Dust mask, non-skid safety shoes, hard hat or hearing protection must be used for appropriate conditions.

Tool Use and Care

- **Use clamps or other practical way to secure and support the workpiece to a stable platform.** Holding the work by hand or against your body is unstable and may lead to loss of control.
- **Do not force tool. Use the correct tool for your application.** The correct tool will do the job better and safer at the same rate for which it is designed.
- **Do not use tool if switch does not turn the tool ON or OFF.** Any tool that cannot be controlled with the switch is dangerous and must be repaired.
- **Disconnect the plug from the power source before making any adjustments, changing accessories or storing the tool.** Such preventive safety measures reduce the risk of starting the tool accidentally.
- **Store idle tools out of the reach of children and other untrained persons.** Tools are dangerous in the hands of untrained users.
- **Maintain tools with care. Keep cutting tools sharp and clean.** Properly maintained tools with sharp cutting edges are less likely to bind and are easier to control.
- **Check for misalignment or binding of moving parts, breakage of parts and any other condition that may affect the tool's operation. If damaged, have the tool serviced before using.** Many accidents are caused by poorly maintained tools.
- **Use only accessories that are recommended for your tool.** Accessories that may be suitable for one tool may become hazardous when used on another tool.
- **Keep handles dry and clean; free from oil and grease.** Allows for better control of the tool.

Service

- **Tool service must be performed only by qualified repair personnel.** Service or maintenance performed by unqualified repair personnel could result in risk of injury.
- **When servicing a tool, use only identical replacement parts. Follow instructions in the Maintenance Section of this manual.** Use of unauthorized parts or failure to follow maintenance instructions may create a risk of electrical shock or injury.

Specific Safety Information

⚠ WARNING

Read this operator's manual carefully before using the 700 Power Drive. Failure to understand and follow the contents of this manual may result in electrical shock, fire and/or serious personal injury.

Call Ridge Tool Company, Technical Service Department at (800) 519-3456 if you have any questions.

Power Drive Safety

- **The Power Drive is made to turn threaders and other equipment. Follow instructions in this Operator's Manual on proper use when threading. When using it to power other equipment, read and follow the safety and operating instructions provided with that equipment.** Other uses may increase the risk of serious injury.
- **When threading one inch or larger pipe, secure Power Drive using a No. 775 Support Arm. Hold Power Drive firmly. If the Power Drive cannot be secured by a Support Arm, use other mechanical means such as a pipe wrench.** Resists high handle forces developed during use and prevents losing control of the tool.
- **Do not use this power drive if switch is broken.** This switch is a safety device that lets you shut off the motor by removing your finger.
- **Do not wear gloves or loose clothing when operating Power Drive. Keep sleeves and jackets buttoned. Do not reach across rotating tool parts or workpiece.** Clothing can be caught resulting in entanglement and serious injury.
- **When using to power equipment other than threaders, the 700 Power Drive may have to be secured to resist high handle forces.** Handle forces that are developed will depend on the application. High handle forces may cause serious injury.
- **Do not use dull or damaged dies.** Sharp cutting dies require less torque and the Power Drive is easier to control.

Description, Specifications and Standard Equipment

Description

The RIDGID Model 700 Power Drive provides rotational motion for threading pipe, conduit and rod (bolt stock) and other purposes. Forward and Reverse rotation can be selected with the REV/OFF/FOR switch.

The Power Drive is designed for use with the No. 12R Die Heads (1/8" – 2" pipe). Other RIDGID drop head die heads (00R, 00-RB, 11R) and RIDGID Geared Threaders (2 1/2" – 6") require the use of adapters. A manual oiling system is available to flood the work during the threading operations. The No. 775 Support Arm should be used to secure the Power Drive and resist high handle forces developed when threading one inch or larger pipe with drop head die heads.

The RIDGID Model 700 Power Drive can also be used in other applications such as to power the RIDGID 258 Pipe Cutter and to turn valves. These applications require the use of the No. 774 Square Drive Adapter.

Specifications/Standard Equipment

Threading Capacity

Pipe and Conduit.....Drop Head Die Heads: 1/8" – 2"; Geared Threaders: 2 1/2" – 6", No. 00-RB Die Head: 1/4" – 1"

Motor:

Type .....Universal

Horsepower.....1/2 HP

Volts .....115V Single Phase AC, 25-60 HZ (230V On Request)

Amps .....13 amps

Switch.....2-Pole, Double Throw (Reversible), Spring Return to Center OFF Position

Operating Speed .....32 RPM (no load)

Gear Head.....All Spur-gear Reduction. Spring-loaded Adapter Pawls. Hardened Steel Spindle Gear

Body .....Gear Case, Motor Housing and Handle Are Cast Aluminum.

Length .....28 1/4"

Weight .....25 lbs.

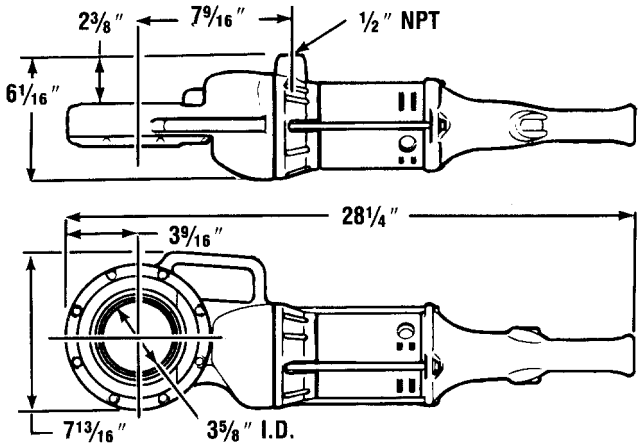

Figure 2 – No. 700 Power Drive

Catalog No.	Model No.	Description	Weight lb.	Weight kg.
41935	700	115V, 25-60 HZ	25	11
41940	700	230V, 25-60 HZ	25	11

Accessories

No. 12-R Die Heads (9)...1/8", 1/4", 3/8", 1/2", 3/4", 1", 1 1/4", 1 1/", 2"

No. 418 Oiler .....Oiler with 1 Gallon RIDGID Thread Cutting Oil

No. 775 Support Arm.....Absorbs Power Drive Handle Forces

Carrying Case .....For Power Drive and Die Heads

No. 460 TRISTAND Chain Vise

Adapters for Drop Head Die Heads

Die Head Model No.	Pipe and Conduit Capacity	Use Adapter Model No.
12-R	1/8" through 2"	—
OO-R	1/8" through 1"	770
O-R	1/8" through 1"	771
11-R	1/8" through 1 1/4"	772
111-R	1/8" though 1 1/4"	773
OO-RB	1/4" though 1"	770

Geared Threaders

Threader Model No.	Pipe and Conduit Capacity	Use Adapter Model No.
141	2 1/2", 3", 3 1/2" & 4"	774
161	4", 4 1/2", 5" & 6"	774

Power Drive Inspection

⚠ WARNING

To prevent serious injury, inspect your Power Drive. The following inspection procedures should be performed on a daily basis:

1. Make sure Power Drive is unplugged.
2. Inspect the power cord and plug for damage. If the plug has been modified, is missing the grounding pin, or if the cord is damaged, do not use the Power Drive until the cord has been replaced.
3. Inspect the Power Drive for any broken, missing, misaligned or binding parts as well as any other conditions which may affect the safe and normal operation of the tool. If any of these conditions are present, do not use the Power Drive until the condition has been repaired.
4. Lubricate the Power Drive if necessary according to the Maintenance Instructions.
5. Use tools and accessories that are designed for your Power Drive and meet the needs of your application. The correct tools and accessories allow you to do the job successfully and safely. Accessories suitable for use with other equipment may be hazardous when used with this Power Drive.
6. Clean any oil, grease or dirt from all equipment handles and controls. This reduces the risk of injury due to a tool or control slipping from your grip.
7. Inspect the cutting edges of your dies. If necessary, have them replaced prior to using the Power Drive. Dull or damaged dies can lead to poor quality threads.
8. Clean metal shavings and other debris from the chip tray of the 418 Oiler. Check the level and quality of the thread cutting oil. Replace or add oil if necessary.

NOTE! Thread cutting oil lubricates and cools the threads during the threading operation. A dirty or poor grade cutting oil can result in poor thread quality and increased threading torque, and reduced die life.

Tool and Work Area Set-Up

⚠ WARNING

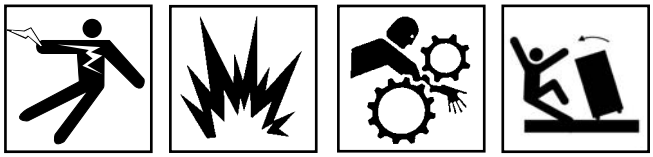

To prevent serious injury, proper set-up of the Power Drive and work area is required. The following procedures should be followed to ensure proper set-up of the tool.

1. Locate a work area that has the following:
   - Adequate lighting
   - No flammable liquids, vapors or dust that may ignite.
   - Grounded electrical outlet
   - Clear path to the electrical outlet that does not contain any sources of heat or oil, sharp edges or moving parts that may damage electrical cord.
   - Dry place for operator. Do not use the Power Drive while standing in water.
   - Level ground for tristand vise and pipe stands.
2. Clean up the work area prior to setting up any equipment. Always wipe up any oil that may have splashed or dripped from the oiler to prevent slips and falls.
3. Plug the Power Drive into the electrical outlet making sure to position the power cord along the clear path selected earlier. If the power cord does not reach the outlet, use an extension cord in good condition.

⚠ WARNING To avoid electrical shock and electrical fires, never use an extension cord that is damaged or does not meet the following requirements:

- The cord has a three-prong plug similar to shown in Electrical Safety section.
- The cord is rated as “W” or “W-A” if being used outdoors.
- The cord has sufficient wire thickness (14 AWG below 25′/12 AWG 25′ - 50′). If the wire thickness is too small, the cord may overheat, melting the cord’s insulation or causing nearby objects to ignite.

⚠ WARNING To reduce risk of electrical shock, keep all electrical connections dry and off the ground. Do not touch plug with wet hands.

4. Check the Power Drive to insure it is operating properly.
   - Depress the switch and make sure it controls the stopping of the Power Drive by releasing the switch.

- Depress and hold the switch. Inspect the moving parts for misalignment, binding, odd noises or any other unusual conditions that may affect the safe and normal operation of the tool. If such conditions are present, have the Power Drive serviced.
- Depress switch in the opposite direction. Check that the Power Drive rotates in the opposite direction.

Operating Instructions For Threading With Drop Head Die Heads

⚠ WARNING

Do not wear gloves or loose clothing when operating Power Drive. Keep sleeves and jackets buttoned.

Do not use this Power Drive if the switch is broken. Always wear eye protection to protect eyes from dirt and other foreign objects.

When threading pipe one inch or larger, use the No. 775 Support Arm or other mechanical means to resist high handle force developed during threading.

1. Push Die Heads or Adapters, spline end first, squarely into the Power Drive until the spring-loaded adapter pawls catch securely *(Figure 3)*.

NOTE! Installation can be made into either side of the Power Drive.

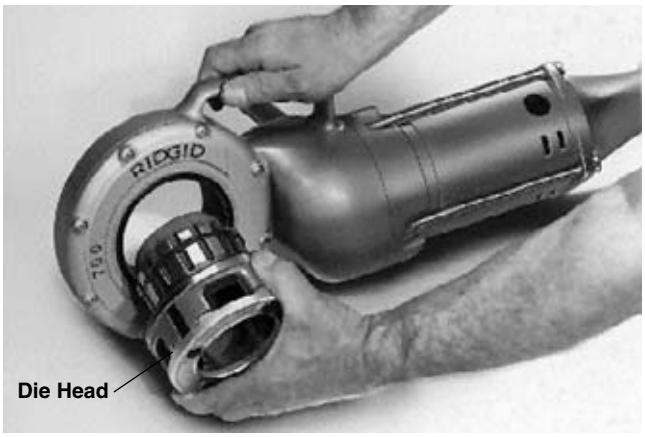

Figure 3 – Installing No. 12-R Drop Head Die Head

2. If possible, secure the pipe in a portable tristand vise or a bench vise.

⚠ WARNING To prevent tipping, long lengths of pipe should also be supported with pipe stand.

3. Be sure the 418 Oiler is properly filled with RIDGID Thread Cutting Oil. Position the oiler in front of the vise *(Figure 4)*.
4. Position No. 775 Support Arm on pipe so end of tang is in line with end of the pipe *(Figures 4 & 5)*. Make sure jaws squarely contact pipe and tighten handle firmly to prevent the slipping of the jaws.

⚠ WARNING To avoid serious injury from losing control of the Power Drive, a support arm should be used when threading one inch or larger pipe.

If the No. 775 Support Arm is not available or cannot be properly attached to the pipe, a pipe wrench may be used by securing the wrench to the pipe and contacting the Power Drive's auxiliary handle *(Figure 6)*. Position wrench a sufficient distance from the Power Drive to allow for the desired length of thread to be cut.

When threading pipe less than one inch in size without a support arm, hold onto the Power Drive firmly with one hand to exert pressure against the handle forces developed during threading.

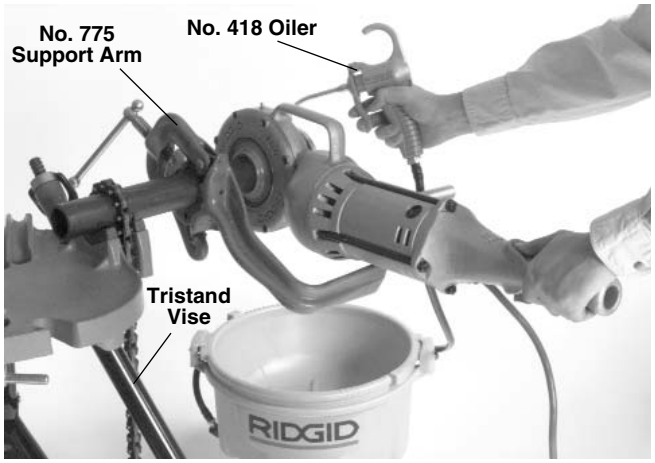

Figure 4 – Threading 2" Pipe With Power Drive Positioned On Left Side Of Vise

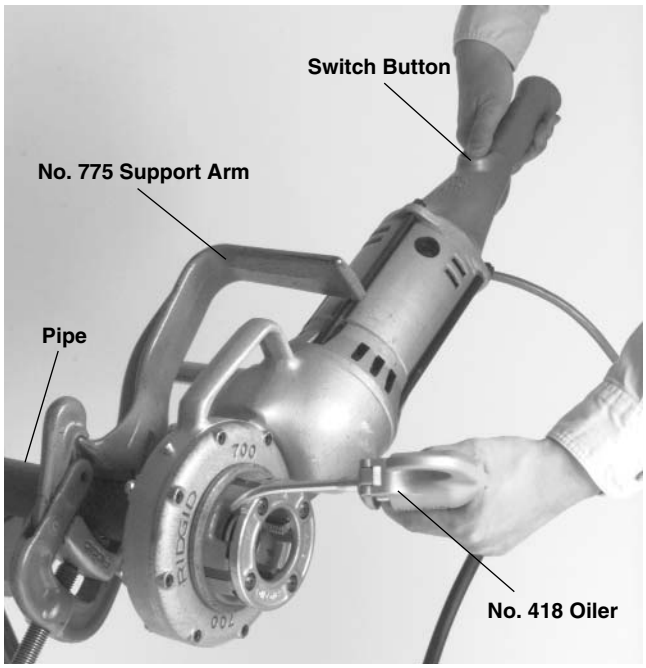

Figure 5 – Threading 2" Pipe With Power Drive Positioned On Right Side Of Vise

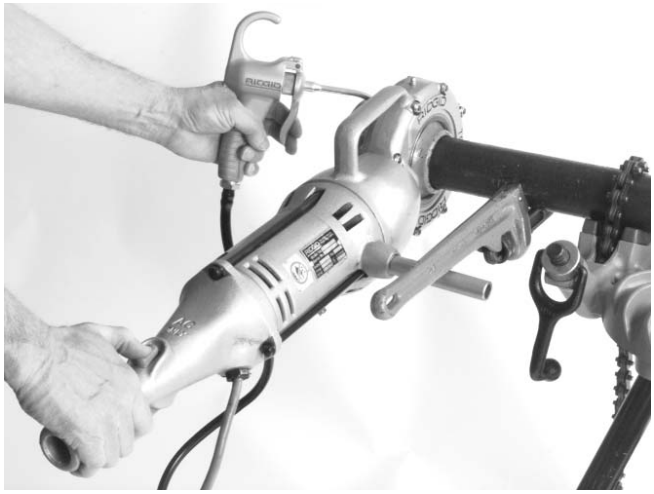

Figure 6 – Threading Using Pipe Wrench As A Support Arm

5. Place Die Head over end of pipe.

⚠ WARNING To avoid serious injury, make sure Power Drive is correctly positioned on support arm *(Figures 4, 5 & 6)*. For right hand threads, Die Head will rotate clockwise (looking at the face of the Die Head). Forces developed by the threading torque will be in the opposite or counter-clockwise direction.

6. Simultaneously actuate the switch button and exert pressure against the Die Head with the palm of free hand to make sure thread is started. Apply plenty of thread cutting oil to the dies during threading. This will reduce the torque required to thread and improve the thread quality.
7. Keep switch depressed until end of the pipe is even with edge of the dies and release the switch button.
8. Back off the Die Head from the threaded pipe by actuating the switch button in the reverse direction.

⚠ WARNING To avoid injury, hold onto the Power Drive handle firmly to resist handle forces developed while backing off the Die Head.

9. When dies clear the end of the pipe, grip the handle on top of the Power Drive and remove the Power Drive and Die Head from the pipe.
10. Remove the support arm from the pipe and the pipe from the vise.

⚠ WARNING To avoid injury, make sure long sections of pipe are supported at the end farthest away from the vise prior to removal.

11. Clean up any oil spills or splatter on the ground surrounding the vise and oiler.

Operation Instructions For Threading With Geared Threaders

⚠ WARNING

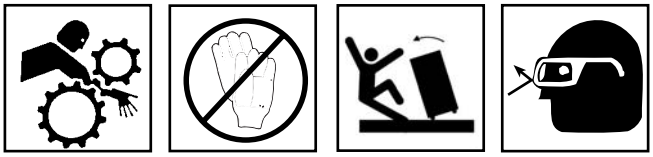

Do not wear gloves or loose clothing when operating Power Drive. Keep sleeves and jackets buttoned. Do not reach across the geared threader.

Do not use this Power Drive if the switch is broken. Always wear eye protection to protect eyes from dirt and other foreign objects.

To prevent tipping, proper set-up of the Power Drive and Geared Threader is required. Follow instructions carefully.

Geared Threaders weigh 95 to 160 pounds. Two (2) persons should be used to lift these threaders.

Adjusting Nos. 141 And 161 Geared Threaders

Cam Plate (Pipe Size) Adjustment Procedure

1. Place threader on floor or workbench with drive shaft up.

2. Pull knobs *(Figure 7)* of cam plate and rotate cam plate to desired pipe size marking on top of die head. Release knobs when locating pins drop into holes in selector plate.

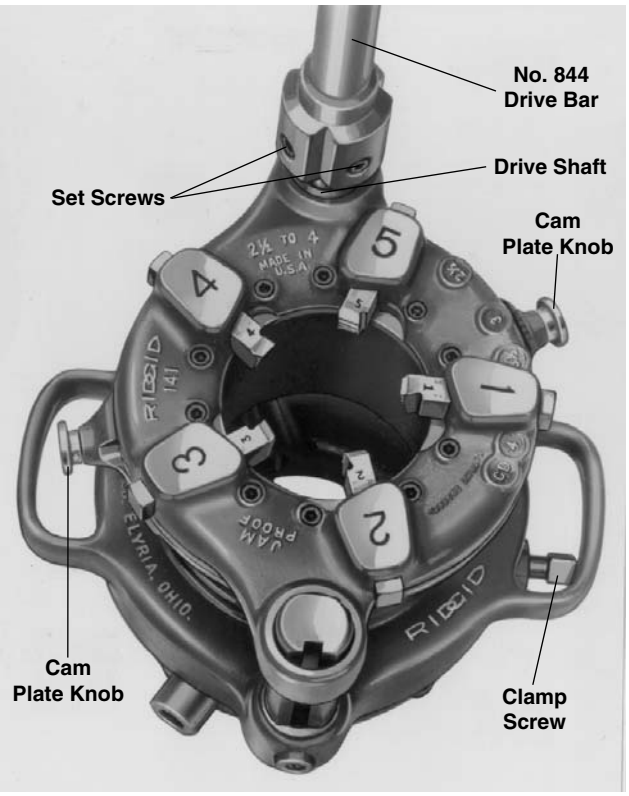

Figure 7 – No 141 Geared Threader (No. 161 Threader Similar)

Thread Size Adjustment Procedure

Grasp workholder and turn square end of drive shaft or turn gear case by hand to respective reference lines on guide post *(Figure 8)*.

Standard Size Thread – Either one of the following two (2) reference lines may be used.

Reference Line 1: Set bottom surface of die head at red STANDARD line on pinion sleeve.

Reference Line 2: Set upper surface of die head which houses guide post even with STANDARD line at top end of guide post.

Oversize Thread: For oversize (shallow thread) set head at bottom line on guide post. This line is marked (2T OVER).

Undersize Thread: For undersize (deep throat) set head at top line on guide post. This line is marked (2T UNDER).

Changing posts For Straight Or Tapered Threads

(Figure 8)

1. Adjust threader to cut standard size threads using "STANDARD" reference line.
2. Remove screw from gear case at base of guide post.

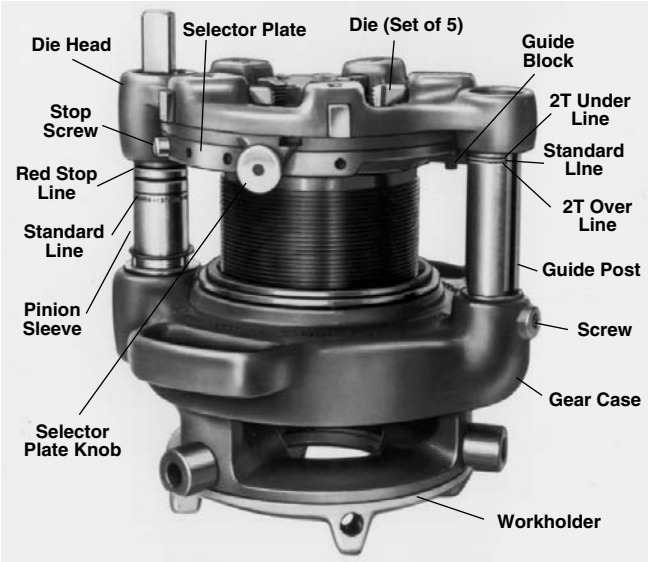

Figure 8 – No. 141 Geared Threader Showing Pinion Sleeve And Guide Post Reference Lines (No. 161 Geared Threader Similar)

3. Pull guide post up until guide block attached to selector plate is disengaged from angle slot in guide post.
4. Turn guide post until straight slot faces inward for straight thread, or tapered slot inward for tapered thread. *Figure 8* shows guide post set to cut tapered thread.
5. Engage guide block in slot and push guide post down into position.
6. Replace guide post screw.

Unit is now set to cut straight threads (NPSM or BSPP) or tapered threads (NPT or BSPT).

Changing Die Set

1. Remove stop screw *(Figure 8)* from selector plate.
2. Pull knobs *(Figure 8)* and rotate cam plate to CD mark on top of die head.
3. Remove worn die set *(Figure 8)* and insert new die set.

IMPORTANT: Be sure to replace complete die set. Die numbers must correspond with slot numbers.

4. Rotate cam plate to original position and replace stop screw.

NOTE! If it becomes necessary to remove or replace the guide block, the stamped number E-1997 on guide block must be AGAINST selector plate. If stamped number is visible you will cut an UNDERSIZED thread.

Threading With Geared Threaders

⚠ WARNING

When threading pipe up to 5″ nominal, the 450 Tristand Vise can be used. However, when threading 6″ nominal pipe, a BC-610 or BC-810 Top Screw Bench Chain Vise or a 460 Tristand Vise must be used.

1. Position pipe to be threaded securely in vise.

⚠ WARNING To prevent tipping, long lengths of pipe should also be supported with a pipe stand. Vise and stands should be on level ground.

2. Install the No. 774 Square Drive Adapter in the Power Drive, spline end first, until the spring-loaded adapter pawls catch securely.

NOTE! Installation can be made from either side of the Power Drive.

3. Adjust Geared Threader for size of pipe to be threaded (Refer to previous instructions). Using two persons, pick up threader and slide it onto the pipe. Carefully center the end of the pipe in the throats of the dies.
4. Tighten Workholder and Clamp Screw securely with the socket wrench *(Figure 9)*.
5. If necessary, fill the 418 Oiler with thread cutting oil. Position the Oiler under the Geared Threader.
6. Slip the No. 774 Square Drive Adapter (installed in Power Drive) onto the Drive Pinion of the Geared Threader and tighten the two set screws in the Adapter.
7. Hold Power Drive handle with one hand and leave other hand free to apply thread cutting oil. Actuate switch button in direction required for threading *(Figure 9)*.

⚠ WARNING To avoid injury, hold onto the Power Drive handle firmly to resist handle force developed during threading.

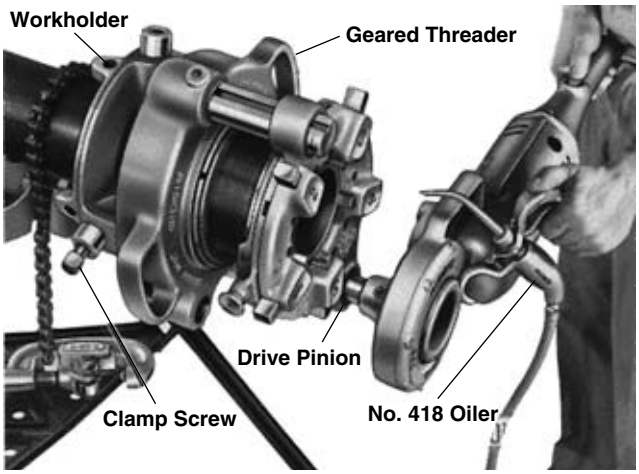

Figure 9 – Threading With Geared Threader

8. Apply plenty of thread cutting oil to the dies during threading to reduce the torque required to thread and improve thread quality.
9. When die head begins to press on ring at base of pinion sleeve and red stop line appears, the threading is completed. Release switch button to stop Power Drive.

NOTE! RIDGID Geared Threaders have a jam-proof design so pinion shaft will automatically disengage if threader is accidentally run on pipe past a full thread length.

10. Back off die head by actuating switch button in the reverse direction. Keep switch actuated until dies are free from end of pipe.

⚠ WARNING To avoid injury, hold onto the Power Drive handle firmly to resist handle forces developed while backing off the die head.

11. Loosen set screws in adapter and remove Power Drive from the Drive Pinion.
12. Loosen Clamp Screw and Workholder with socket wrench. Using two persons, remove the Geared Threader from the pipe.
13. Remove the pipe from the vise.

⚠ WARNING To avoid injury, make sure long sections of pipe are supported at the end farthest away from the vise prior to removal.

14. Clean any oil spills or splatter on the ground surrounding the vise and oiler.

Accessories

⚠ WARNING Only the following RIDGID products have been designed to function with the 700 Power Drive. Other accessories suitable for use with other tools may become hazardous when used on this Power Drive. To prevent serious injury, use only the accessories listed below.

Accessories For Power Drive

Model No.	Description
770	Adapter for 00-R & 00-RB
771	Adapter for 0-R
772	Adapter for 11-R
773	Adapter for 111-R
774	Square Drive Adapter
775	Support Arm for No. 700 Power Drive
B-171-X	Metal Carrying Case for No. 700 & Accessories
418	Oiler w/1 Gal. Nu-Clear Thread Cutting Oil
—	Gearhead Motor Grease

NOTE! See Ridge Tool catalog for listing of pipe supports, vises and thread cutting oil.

Threaders:

Drop Head Threaders

12-R

00-R

11-R

00-RB

Geared Threaders

141 2½" – 4" Pipe (NPT or BSPT)

161 4" – 6" Pipe (NPT or BSPT)

Contact a RIDGID distributor or consult the Ridge Tool catalog for specifications and catalog numbers.

Maintenance Instructions

⚠ WARNING

Make sure Power Drive is unplugged from power source before performing maintenance or making any adjustments.

Motor Brush Replacement

Check motor brushes every 6 months and replace brushes when they are worn to less than ¼".

Lubrication

Grease face gear and bearings every 3 to 6 months depending upon the amount of use. Grease fitting is provided on the gear housing.

Tool Storage

⚠ WARNING Motor-driven equipment must be kept indoors or well covered in rainy weather. Store the Power Drive in a locked area that is out of reach of children and people unfamiliar with power drives. This power tool can cause serious injury in the hands of untrained users.

Service and Repair

⚠ WARNING

Service and repair work on this Power Drive must be performed by qualified repair personnel. Tool should be taken to a RIDGID Independent Authorized Service Center or returned to the factory. All repairs made by Ridge Tool Co. service facilities are warranted against defects in material and workmanship.

⚠ WARNING When servicing this Power Drive, only identical replacement parts should be used. Failure to follow these steps may create a risk of electrical shock or other serious injury.

If you have any questions regarding the service or repair of this machine, call or write to:

Ridge Tool Company
Technical Service Department
400 Clark Street
Elyria, Ohio 44035-6001
Tel: (800) 519-3456
E-mail: TechServices@ridgid.com

For name and address of your nearest Independent Authorized Service Center, contact the Ridge Tool Company at (800) 519-3456 or http://www.ridgid.com

Troubleshooting

WARNING: Always unplug power cord before servicing Power Drive.

PROBLEM	CAUSE	CORRECTION
Motor does not start.	Power Drive unplugged.	Plug into power source.
	Fuse blown.	Install new fuse.
	Brushes do not touch armature.	Check brushes, replace if worn.
Motor sounds overloaded.	Overload because of dull dies.	Replace dies.
	Bad quality or insufficient thread cutting oil.	Use RIDGID thread cutting oil in adequate quantity.
Sparks forming at motor.	Bad contact between brushes and brush holder.	Tighten the screws, make sure brush is pressed firmly onto commutator.
	Brushes do not touch commutator properly.	Replace worn brushes.
	Brushes of different manufacture.	Only use original brushes.
	Sharp edge on brush.	Break edge.
Die head does not start threading.	Dull or broken dies.	Replace dies.
	Machine running in wrong direction.	Check setting of the direction switch.
	Improperly set dies.	Reset dies.
Damaged Thread.	Dull dies.	Replace dies.
	Dies not assembled in correct sequence.	Put dies in correct sequence.
	Low quality pipe.	Make sure only pipe of good quality is used.
	Bad quality or insufficient thread cutting oil.	Use only RIDGID thread cutting oil in adequate quantity.
Support arm turns while threading.	Support arm feedscrew not tight.	Tighten feedscrew.
	Support arm jaws dirty.	Clean with wire brush.
	Support arm not square on pipe.	Make sure sits square on pipe.
Die heads cannot be changed properly.	Burr has occurred at the spline end of the die head.	Eliminate burr with file.

Wiring Diagram (115/230V)

Standard Color Code

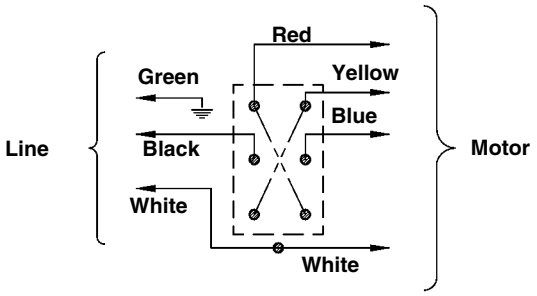

European Color Code (230V)

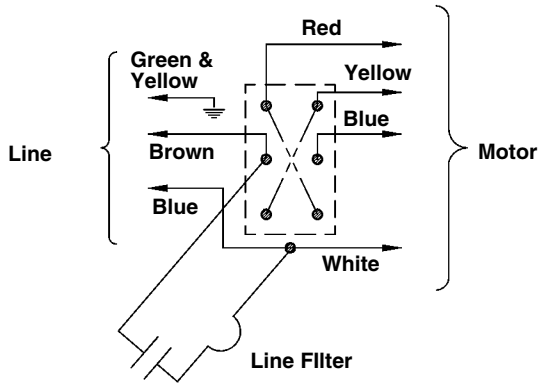

Installation of Brush Lead Wires